SELECT 3.0



INDICATIVE PRODUCT IMAGE

Needed Data for selection

Ambient Temp.	32 °C
Cold Room Temp.	2 °C
Requested capacity	1200 W

Search results

Total capacity	1327 W
Total volume	15 m³
Tolerance	10.6 %

Product file

Type	Compact
Mounting	Wall
Code	BEWS251MA20P11
Range	BEWS
Version	Saddle
Noise	31.4 dBA 10 m
Condensation	Air
Net weight	47 kg
PED	0
Defrost	Hot gas
Expansion	Valve
Application	MBP
Refrigerant	R290

Dimensions

Width L	421 mm
Depth P	876 mm
Height H	728 mm

Absorptions

Power consumption	780 W
Current consumption	4.3 A

Condenser

Fan-motors no.	1
Diameter	254 mm
Air flow	600 m³/h

Unit cooler

Fan-motors no.	1
Diameter	200 mm
Air flow	500 m³/h
Air throw	6.5 m

Compressor

Type	Hermetic
Compressors no.	1
Brand	EMBRACO
Voltage	230/1/50
Displacement	16.8 cm³

Technical data - BEWS251MA20P11

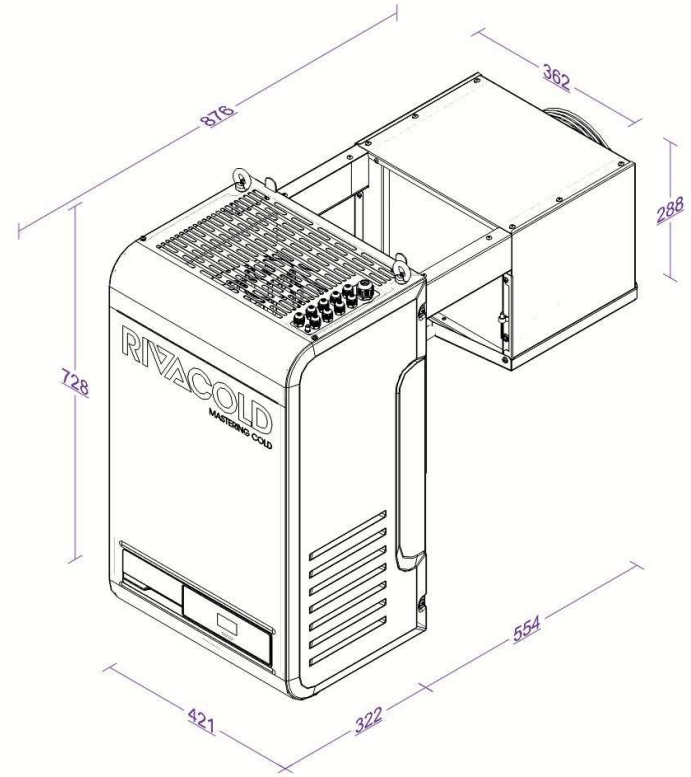

Technical data - BEWS251MA20P11

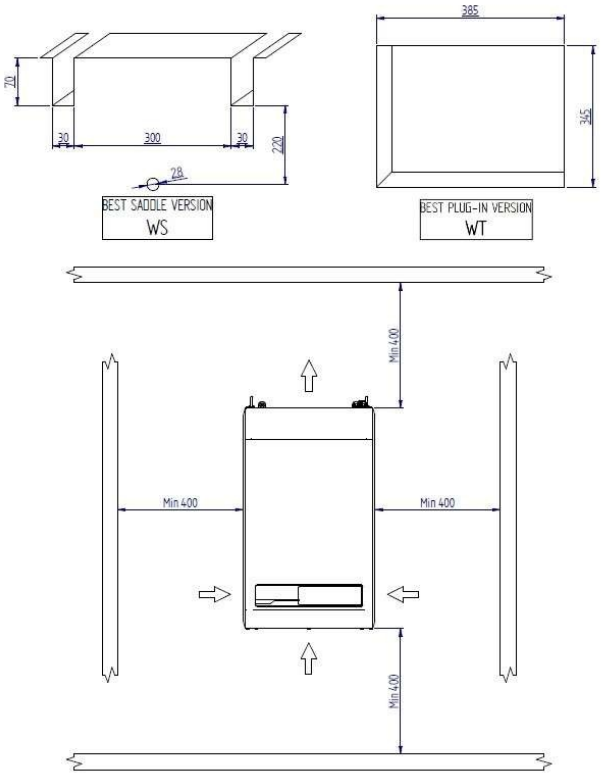

Refrigerating capacity table (W) - BEWS251MA20P11

TA / TCella	-5°C	0°C	5°C	10°C
25°C	1159 (11.0 m³)	1335 (17.8 m³)	1523 (27.7 m³)	1722 (44.6 m³)
32°C	1091 (8.0 m³)	1256 (11.8 m³)	1434 (19.9 m³)	1621 (31.8 m³)
43°C	975 (4.6 m³)	1123 (6.6 m³)	1281 (9.6 m³)	1447 (16.2 m³)

Values refered to :
Suction gas : +20°C
Subcooling : 0K
Superheat : 100%
Compressor absorption :
Te -5°C (HBP); Tcond +50°C
Te -10°C (MBP); Tcond +50°C
Te -30°C (LBP); Tcond +50°C



INDICATIVE PRODUCT IMAGE

MAIN COMPONENTS MECHANICAL PART

- Hermetic compressors with thermal motor protection
- Condenser with Ø5mm tubes with internale spiral rifling
- Evaporator with Ø5/16“ tubes with internal spiral rifling
- Electronic fan-motors on both condenser and evaporator
- Mechanical thermostat valve supplied standard across entire range
- Hot gas defrosting
- Evaporating water tray
- R290 refrigerant charge ≤ 150g per circuit

CONTROL CIRCUIT and ELECTRIC PART

- Safety pressure switch on high pressure side
- High and low pressure probes
- Door micro wired with cable L= 2.5
- Door heater cable on LT models (L = 2.5m)
- LED cold room light with cable L= 5m
- Power cable L= 2.5 m with wired electrical plug
- Industrial Plug (2P+E or 3P+N+E) 16 A
- Industrial Plug (2P+E) 32 A only on BEWx352MA80P11 and BEWx352LA60P11

ELECTRONIC CONTROL

- Riv-olution: programmable electronic control with software developed by Rivacold
- Smart Defrost and Leak Detector functions
- Bluetooth connectivity
- APP to manage and control packaged system functions
- Connection cable for BMS (RTU Modbus Protocol)
- LED display with new graphics and white backlight
- Backlit touch keyboard

STRUCTURE

- Self-supporting frame in galvanized metal sheet
- Easily removable housing to allow rapid access to the components in case of inspection or maintenance
- Installation kit complete with screws and washers to secure the packaged system to the wall of the coldroom and sealing putty in strips for insulation
- Plug-in thickness 100 mm for MT models and 150 mm for BT models (WT models)

OPTIONAL ITEMS

- Epoxy powder finish on all metal sheets
- Plug-in insulation kits supplied separately for saddle models (WS): 100mm, 150mm, 200mm
- Catephoresis treatment of exchangers (Condenser + Evaporator)
- Extension cable kits L=5m and L=10m (coldroom light cable, door heater cable, micro-switch cable)
- Remote control panel kits with 5m cable and 10m cable
- Presetting for Master & Slave (cable L=5m)
- Alarm cable kit L=5m
- IoT – Remote monitoring and control service (Wi-fi – 2G)