8. Exploded View

Indoor Unit

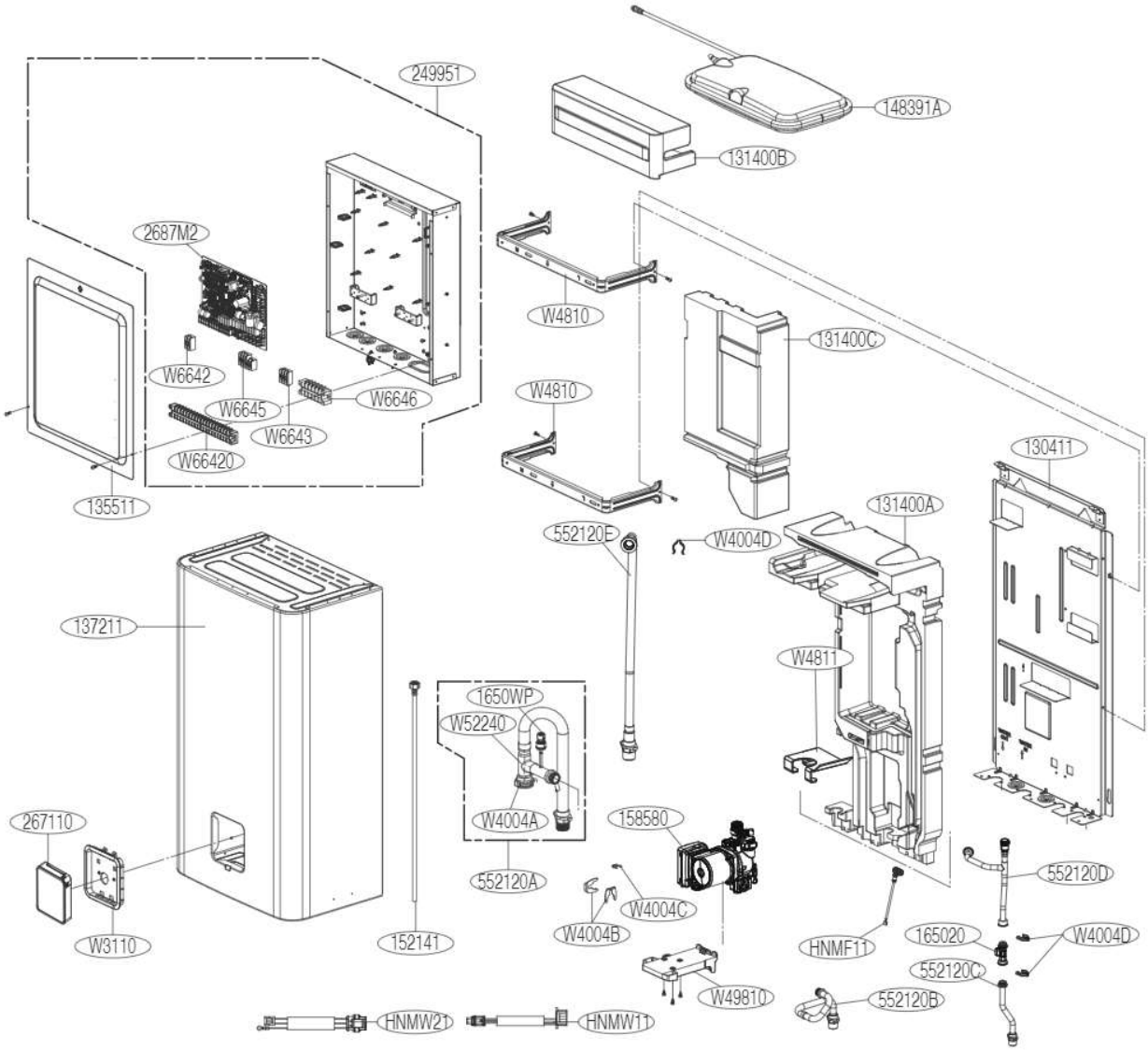

Location No.	Description	Description	Housing color
HNMW21	Harness, single (CN_W_PUMP_A)	Pump AC Wire	White
HNMW11	Harenss, multi (CN_MOTOR1)	Pump DC Wire	Red
HNMF11	Harness, single (CN_EXT)	For external controller	Blue

Location No.	Description	Remark
W4004A	Clip	For assemble flow sensor or pipe
W4004B	Clip	For assemble pump and pipe
W4004C	Clip	For assemble pump and expansion tank hose

Copyright © 2021 LG Electronics Inc.
All rights reserved. Only training and service purposes.